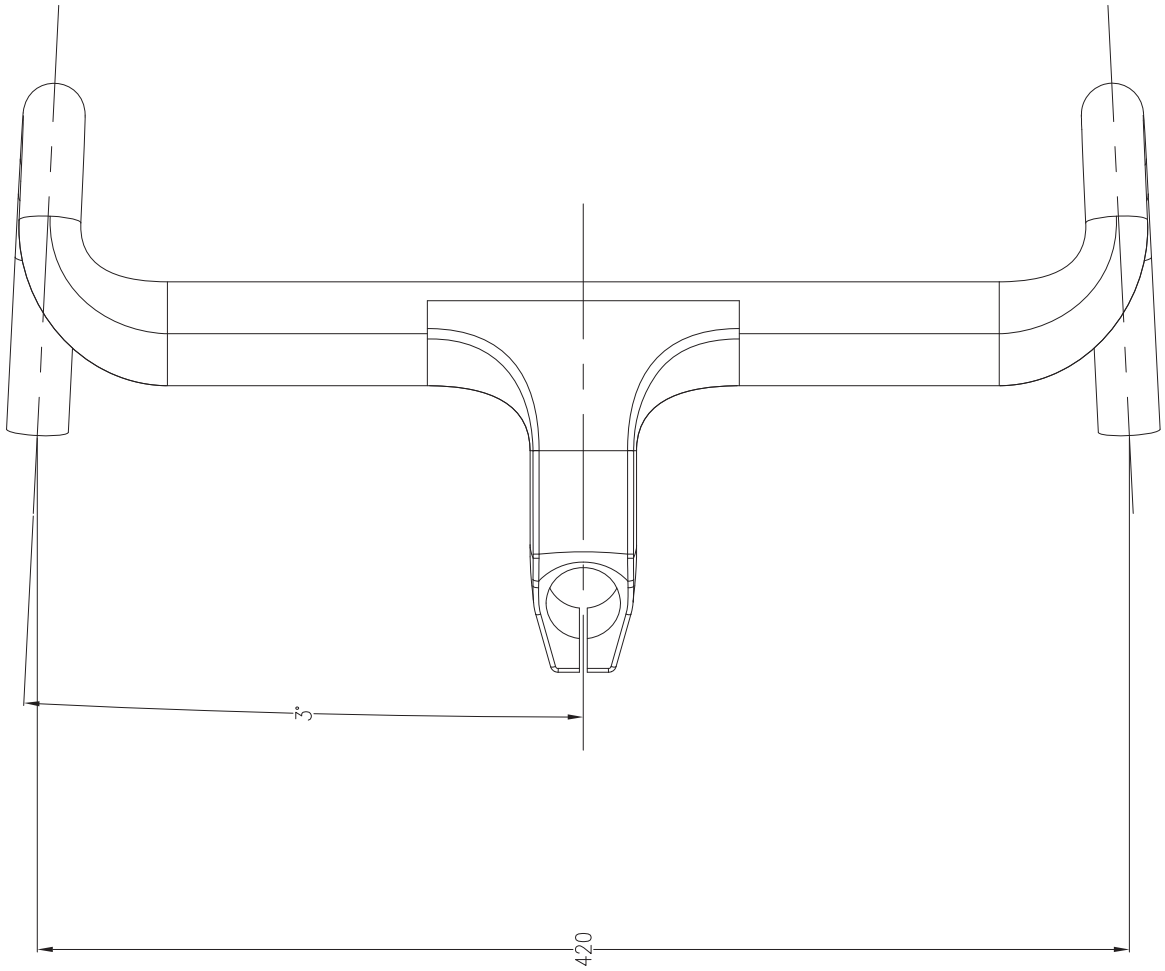
420

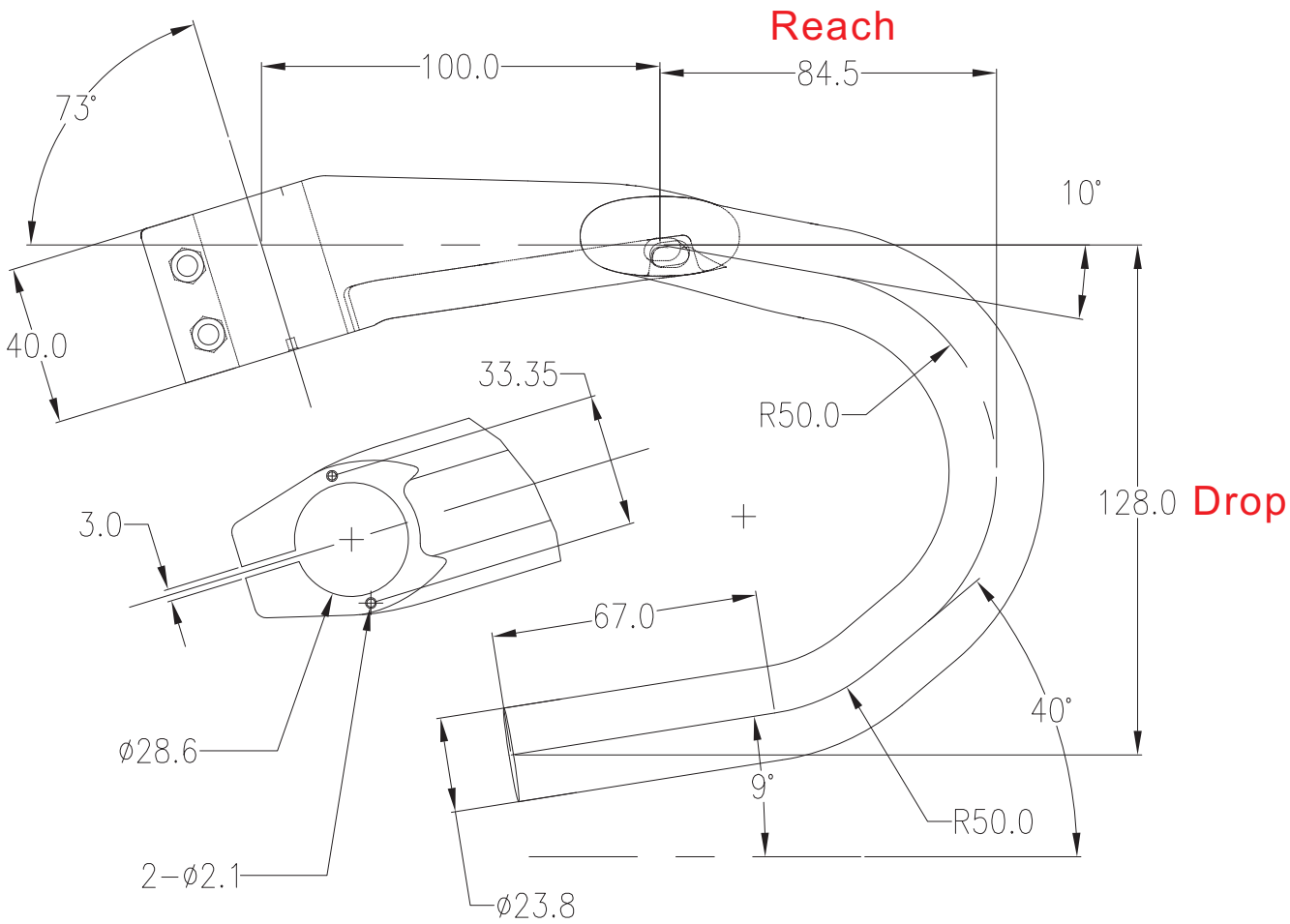
Reach
100.0
84.5
73°
10°
40.0
33.35
R50.0
128.0
Drop
3.0
67.0
40°
ø28.6
9°
R50.0
2−ø2.1
ø23.8